Digital Readout for UV through Near-IR MKIDs

Matt Strader
Mazin Lab
June 17, 2014

The Optical/UV MKID Team:

UCSB: Ben Mazin, Seth Meeker, Matt Strader, Paul Szypryt, Gerhard Ulbricht, Julian van Eyken, Alex Walter, Clint Bocksteigel

JPL: Bruce Bumble

Oxford: Kieran O'Brien

Fermilab: Chris Stoughton, Juan Estrada, Gustavo Cancelo and more…

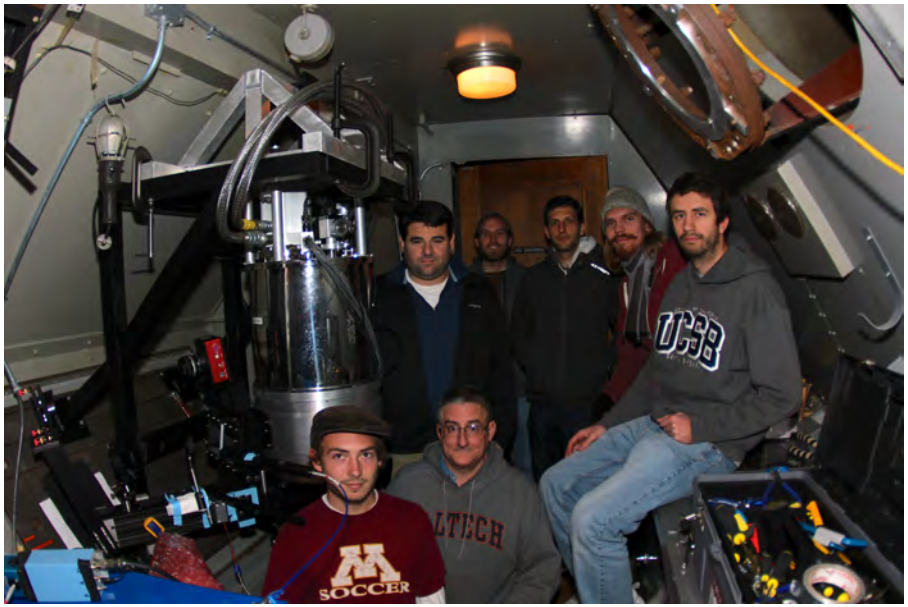

Outline

- Detectors and Instrument
- Readout
- Observations and Results
- Ongoing and Future Work

Outline

- **Detectors and Instrument**
- Readout
- Observations and Results
- Ongoing and Future Work

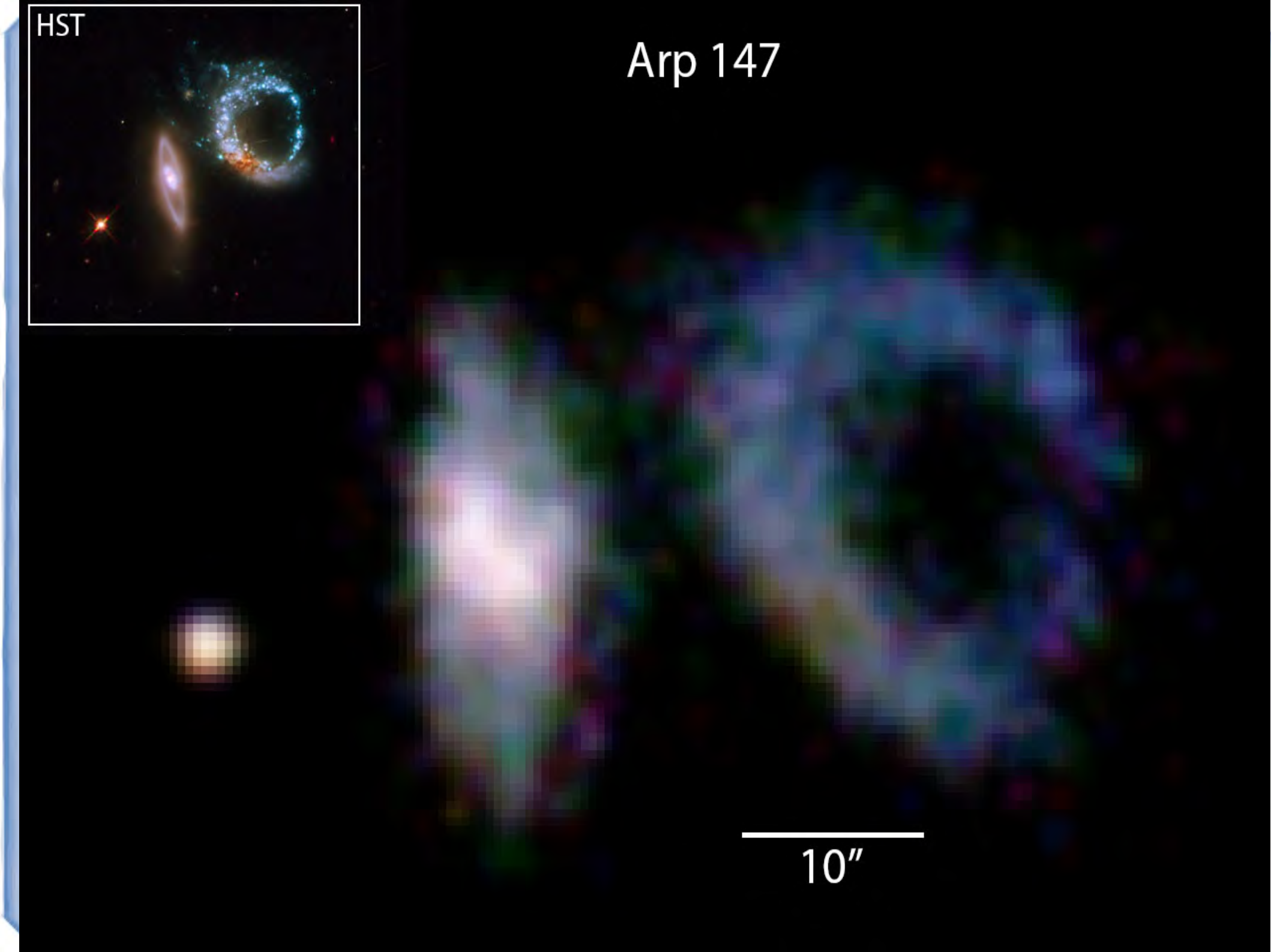
HST
Arp 147
10″

Microwave Kinetic Inductance Detectors (MKIDs)

- UV, optical, infrared
- Detect individual photons
- Intrinsic energy resolution
- Timing resolution
- No dark current, read noise
- Straightforward to scale up

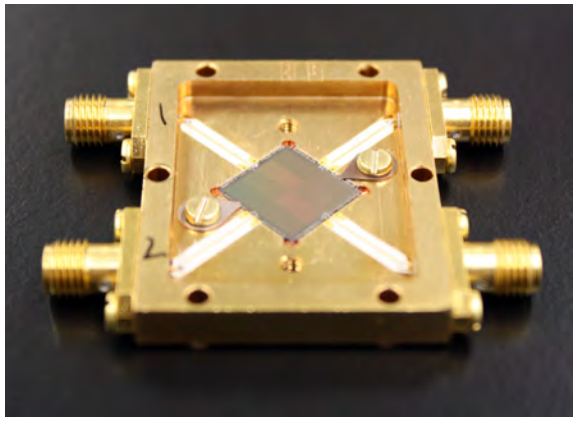

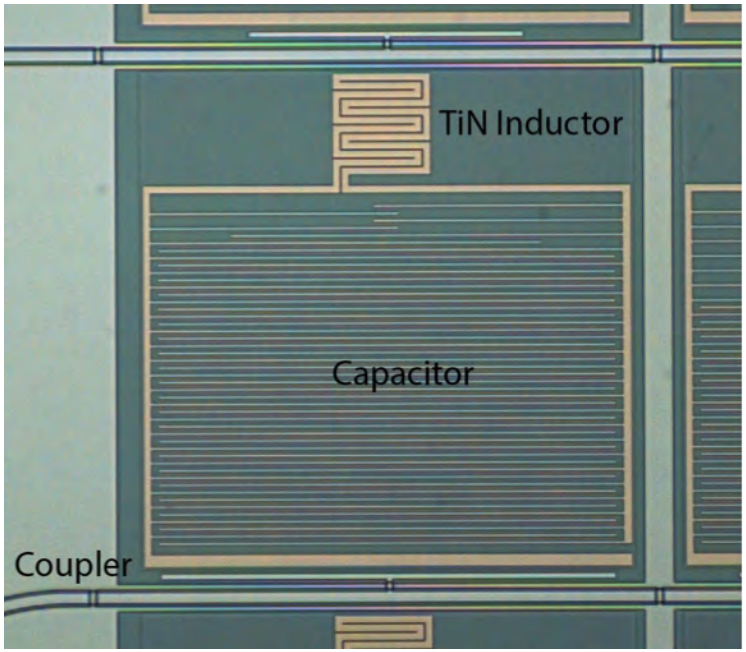

MKID Readout

MKID Equivalent Circuit

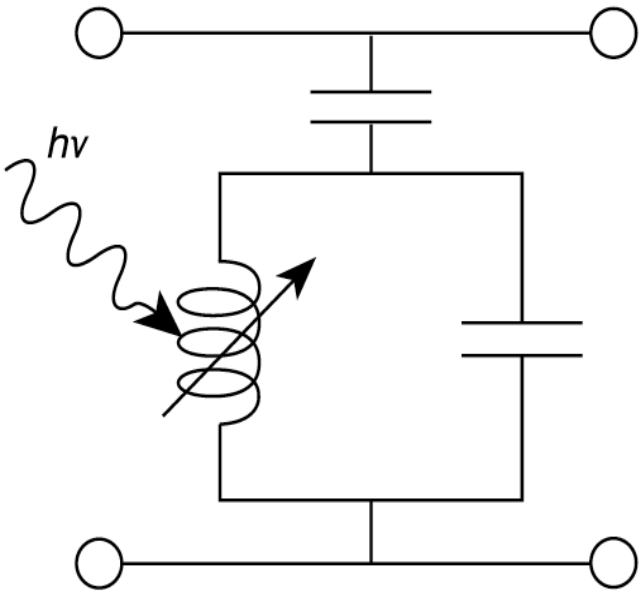

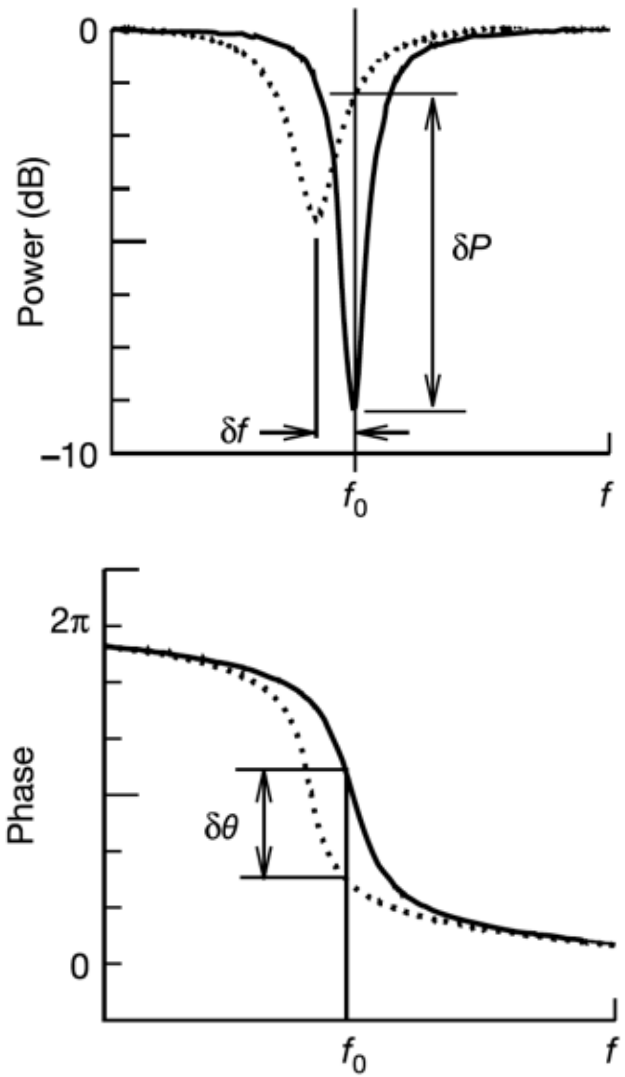

Day et al. 2003

Photon Phase Pulses

- Phase Pulse gives
  - Energy – Pulse depth
  - Timestamp

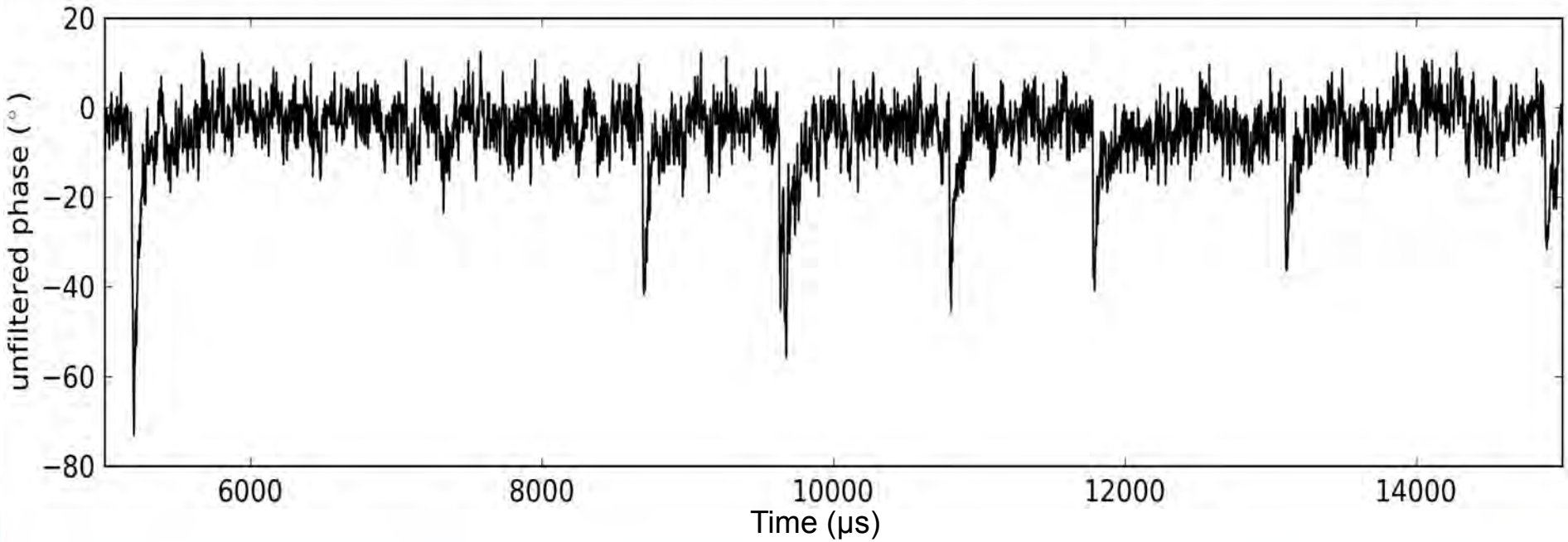

Frequency Domain Multiplexing

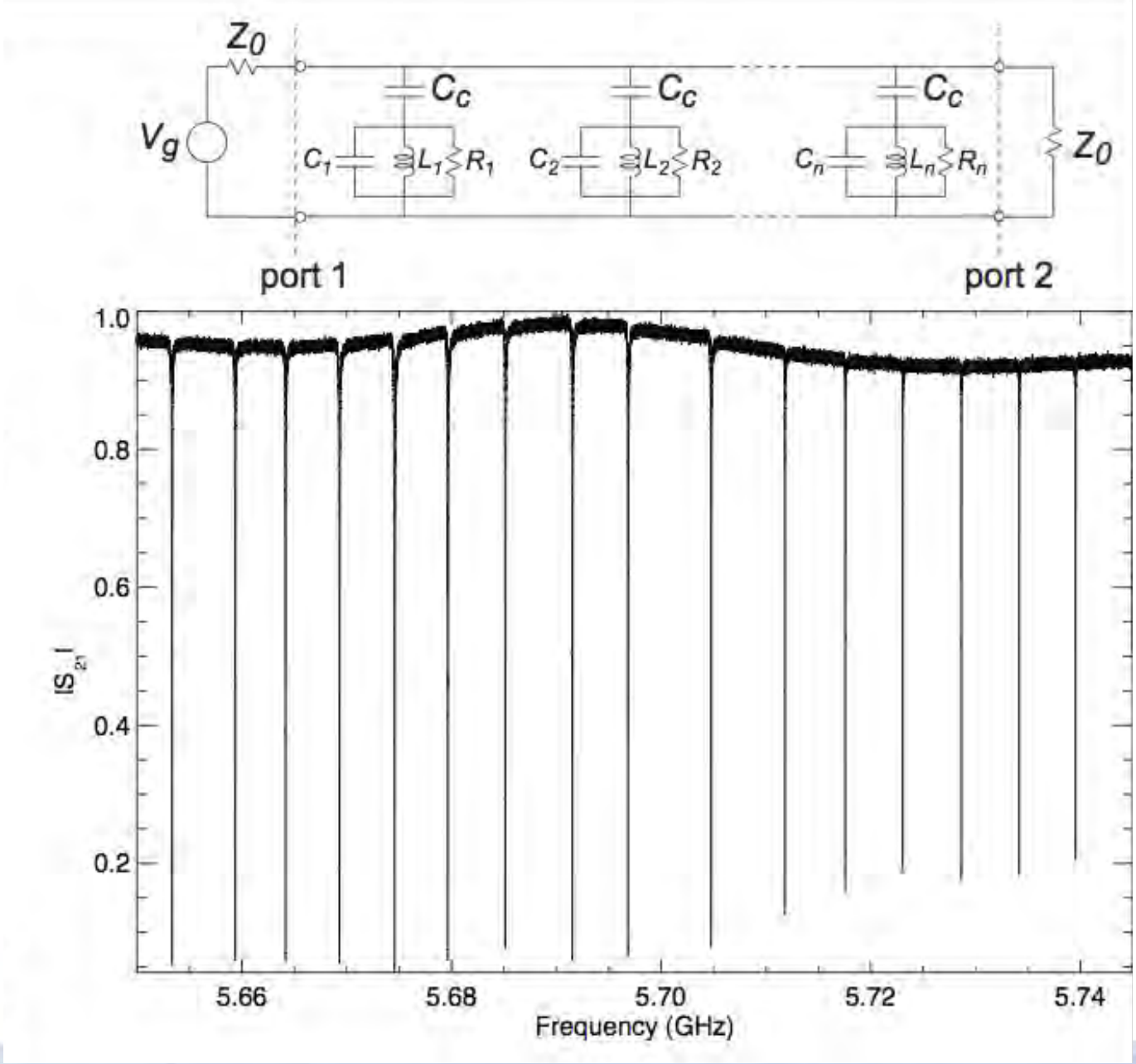

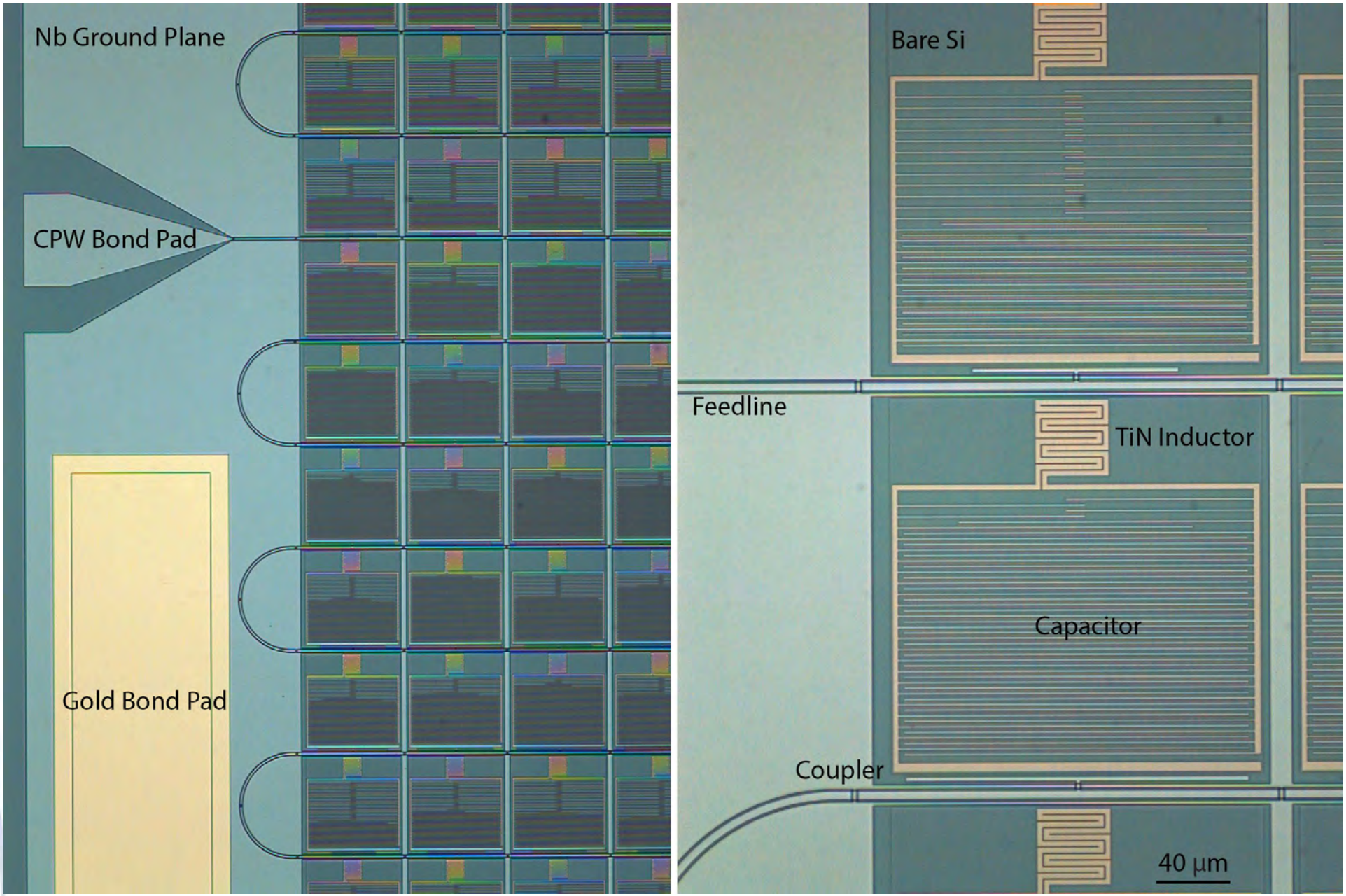
Nb Ground Plane
CPW Bond Pad
Gold Bond Pad
Bare Si
Feedline
TiN Inductor
Capacitor
Coupler
40 µm

ARCONS (Array Camera for Optical to Near-infrared Spectrophotometry)

- 2024 pixels (46x44)
- Two feedlines
- 22”x23” field of view
- 400-1100 nm
- Maximum count rate ~2000 cps per pixel
- Operating temp: 110 mK

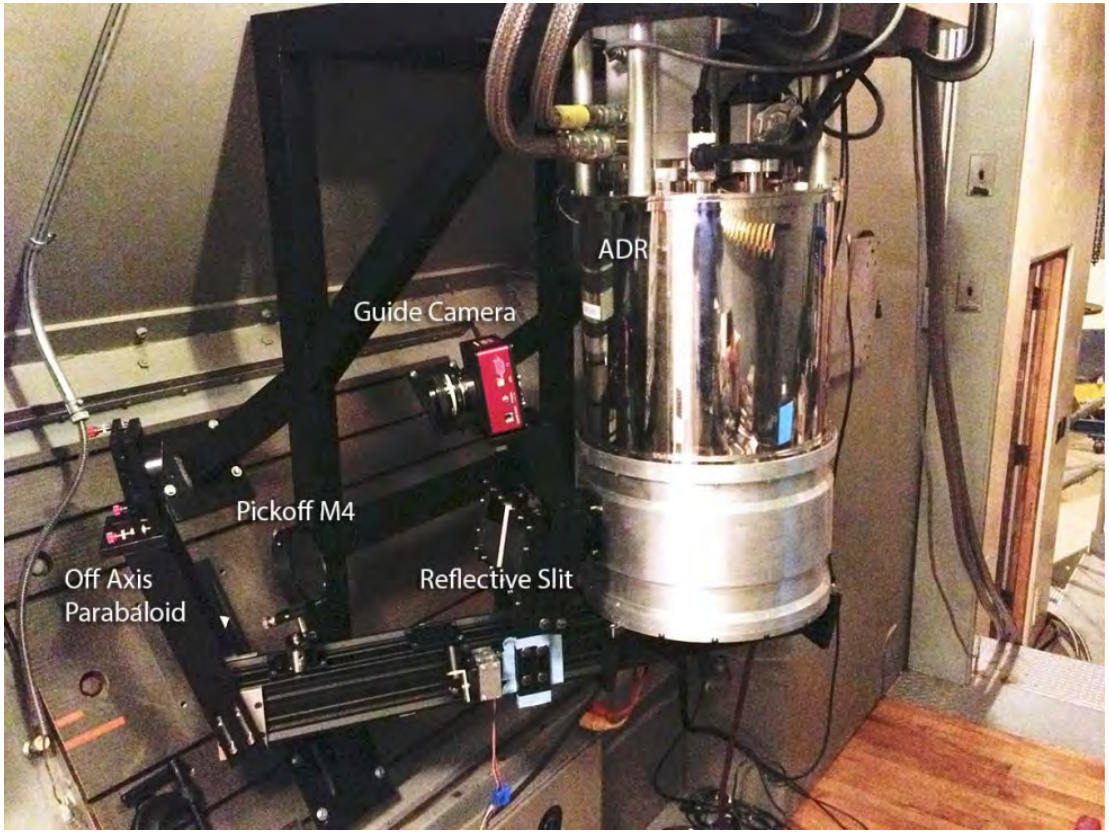

Outline

- Detectors and Instrument
- **Readout**
- Observations and Results
- Ongoing and Future Work

Hardware

- ROACH Board
  - FPGA
  - PowerPC processor
  - Memory modules
- DAC at 512 MHz
- ADC at 512 MHz
- Intermediate Frequency (IF) board

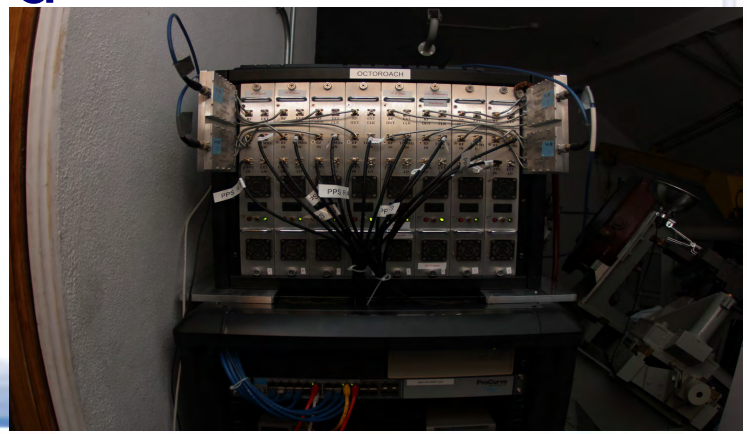

Readout Process

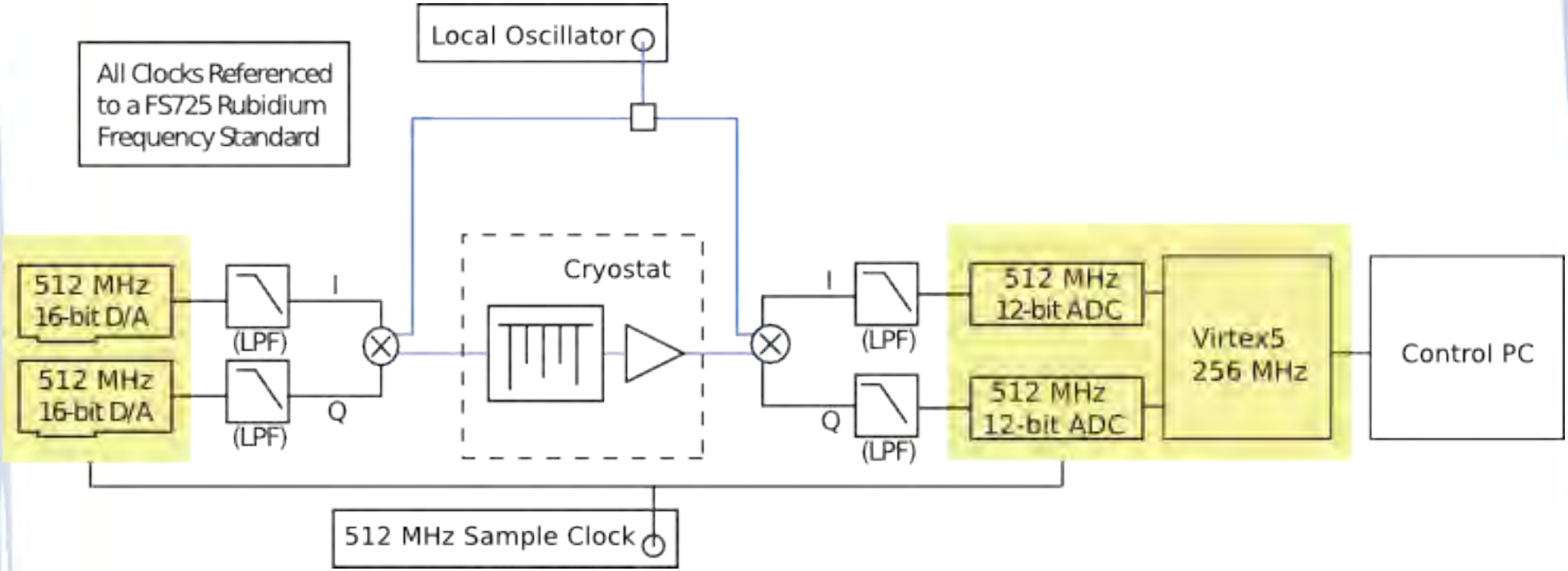

Firmware

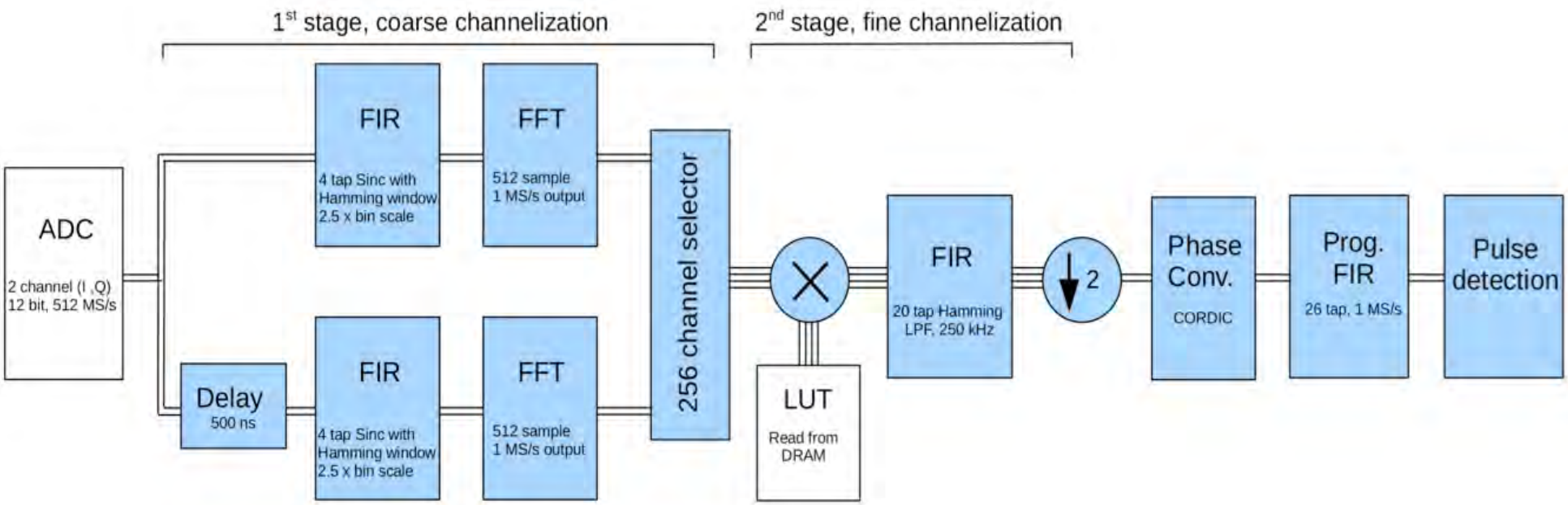
1st stage, coarse channelization
2nd stage, fine channelization
ADC
2 channel (I ,Q)
12 bit, 512 MS/s
Delay
500 ns
FIR
4 tap Sinc with
Hamming window
2.5 x bin scale
FFT
512 sample
1 MS/s output
FIR
4 tap Sinc with
Hamming window
2.5 x bin scale
FFT
512 sample
1 MS/s output
256 channel selector
LUT
Read from
DRAM
FIR
20 tap Hamming
LPF, 250 kHz
2
Phase
Conv.
CORDIC
Prog.
FIR
26 tap, 1 MS/s
Pulse
detection

Polyphase Filter Bank

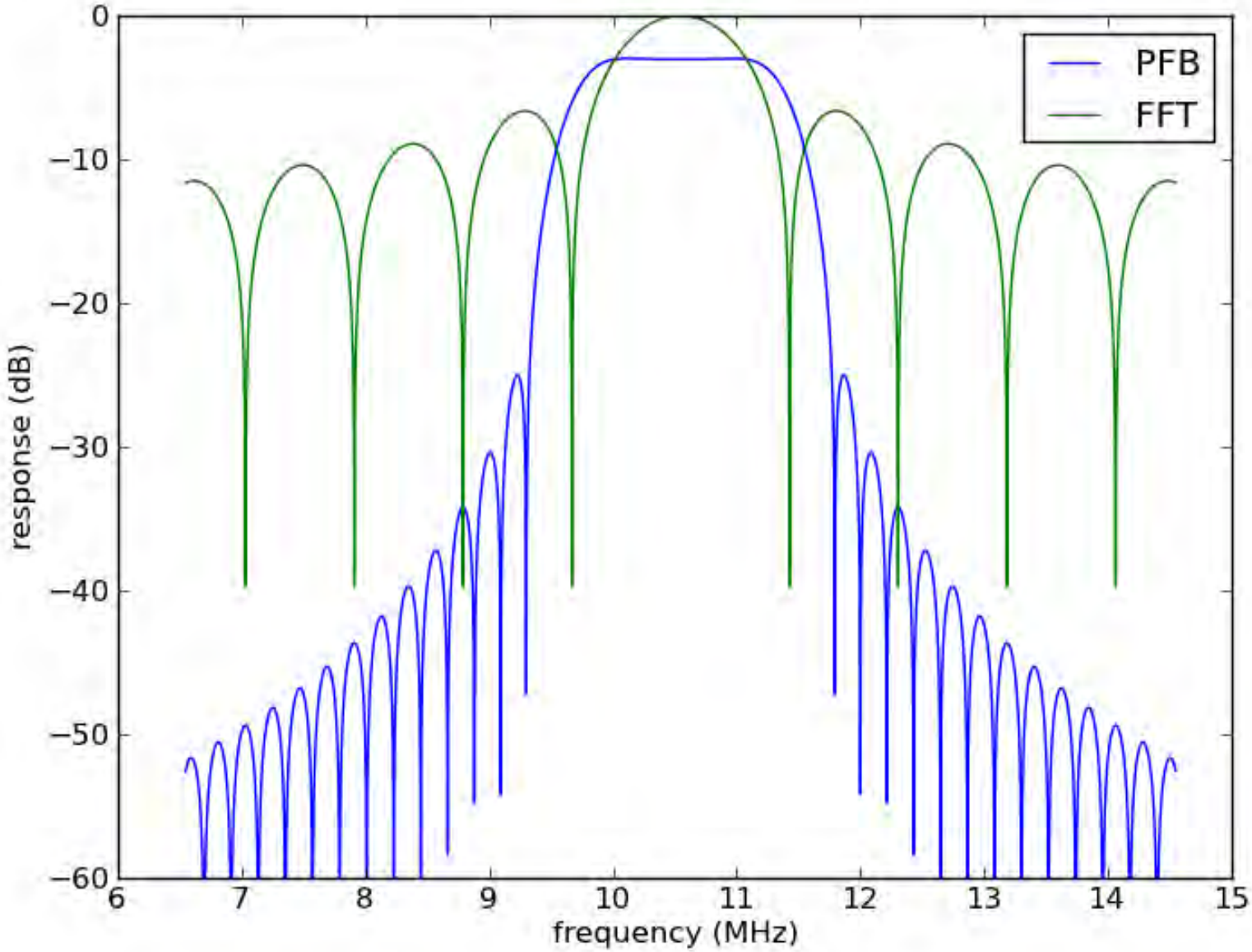

Polyphase Filter Bank

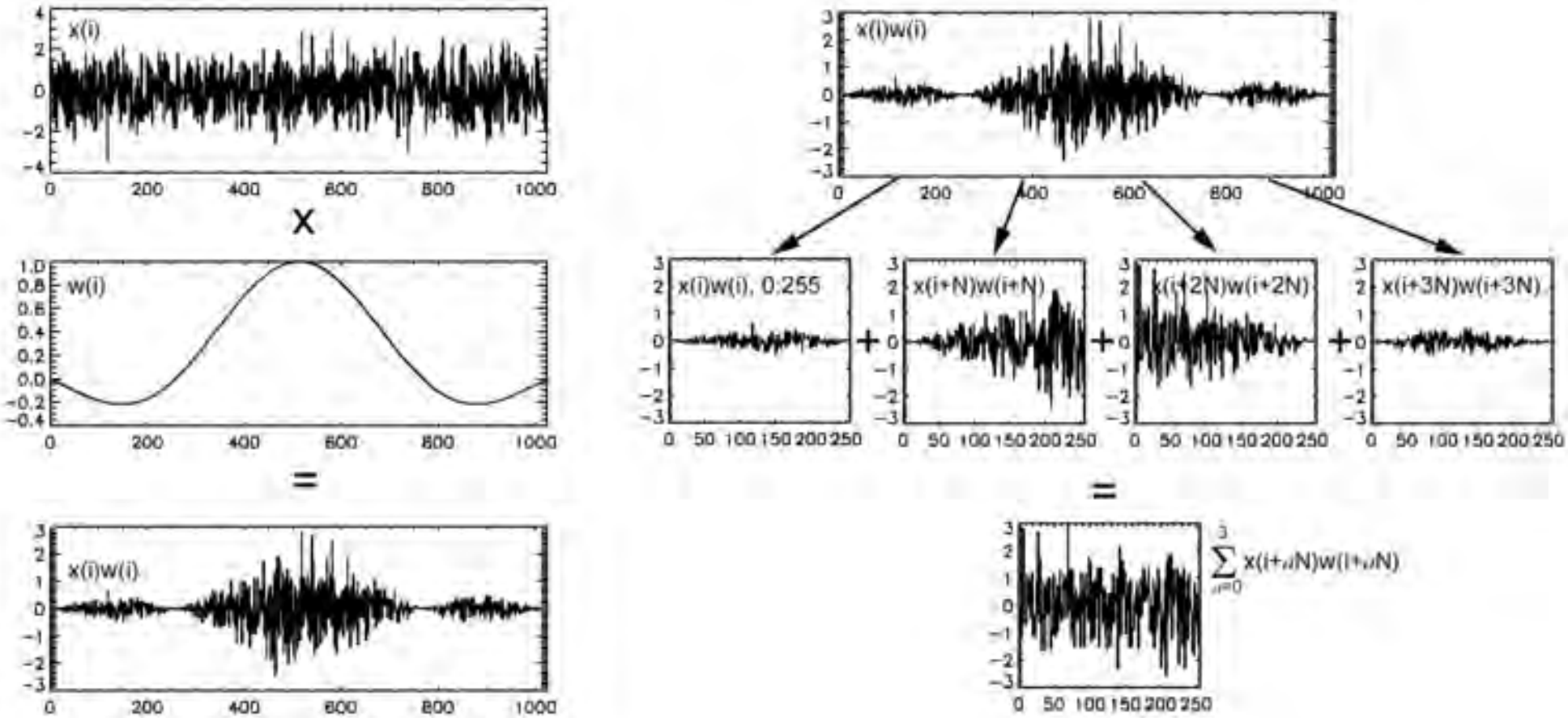

Image Credit: Casper Wiki

Firmware

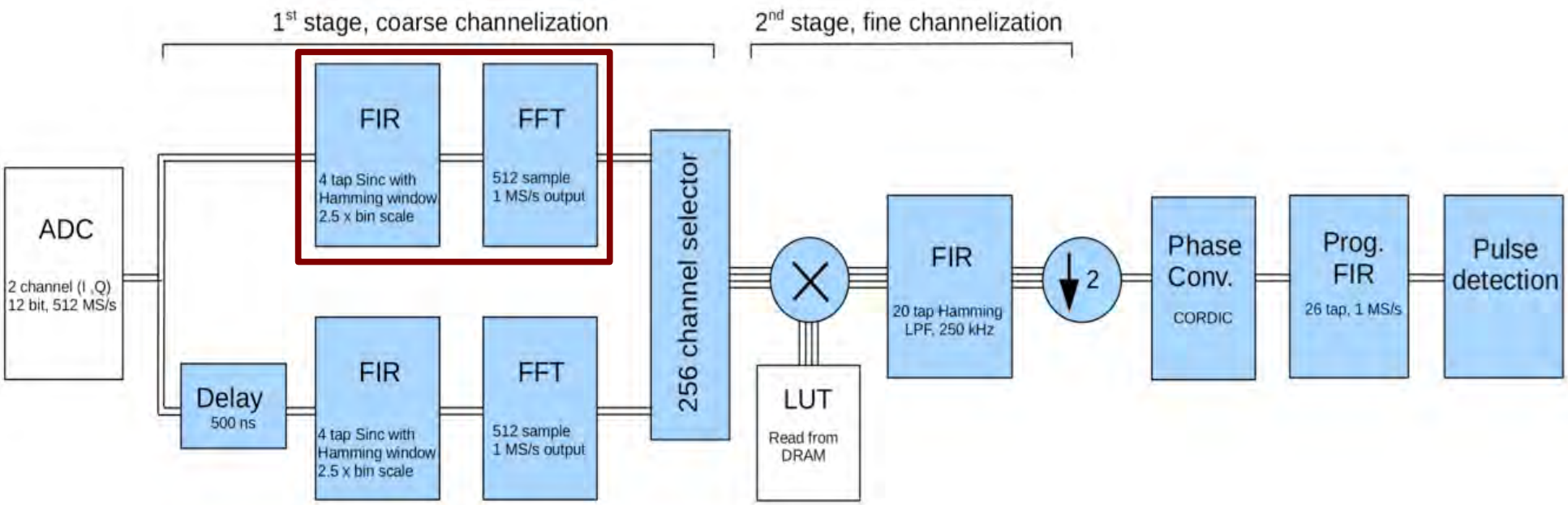
1st stage, coarse channelization
2nd stage, fine channelization
ADC
2 channel (I ,Q)
12 bit, 512 MS/s
Delay
500 ns
FIR
4 tap Sinc with
Hamming window
2.5 x bin scale
FFT
512 sample
1 MS/s output
FIR
4 tap Sinc with
Hamming window
2.5 x bin scale
FFT
512 sample
1 MS/s output
256 channel selector
LUT
Read from
DRAM
FIR
20 tap Hamming
LPF, 250 kHz
2
Phase
Conv.
CORDIC
Prog.
FIR
26 tap, 1 MS/s
Pulse
detection

Overlapping FFT

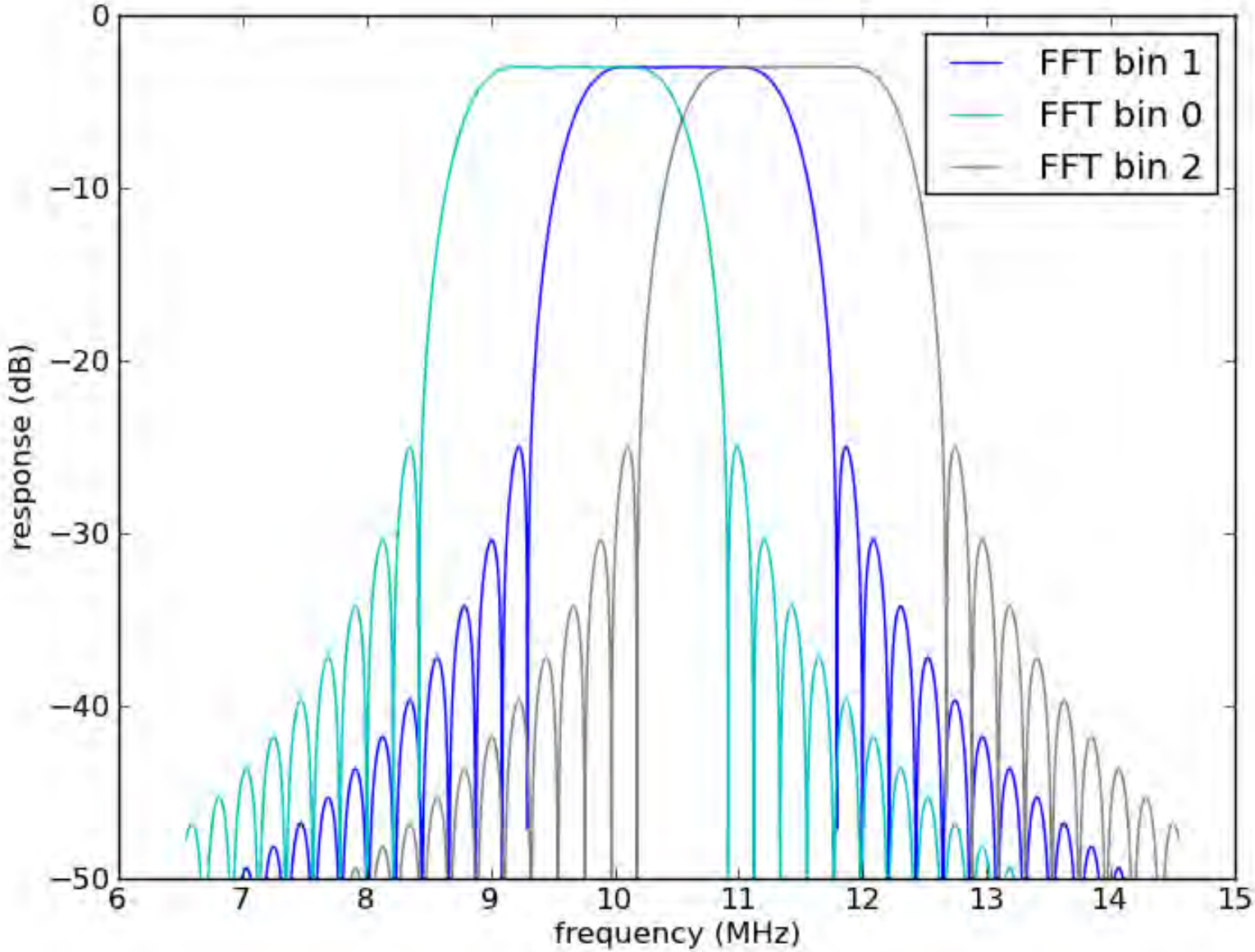

Firmware

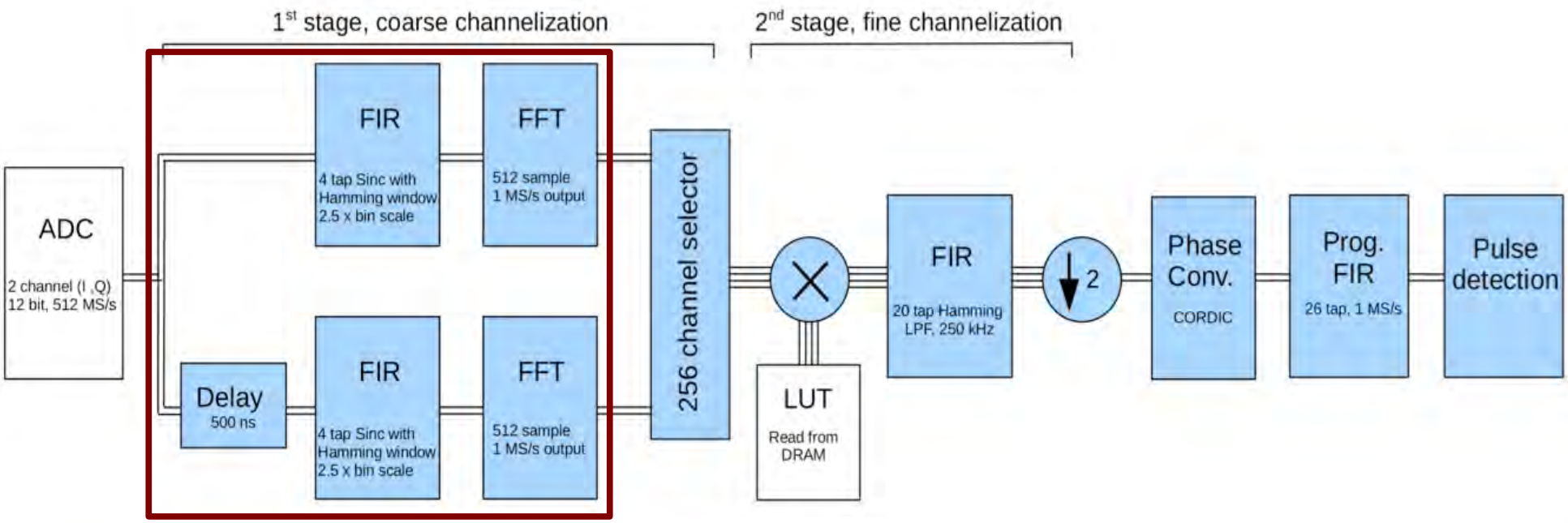
1st stage, coarse channelization
2nd stage, fine channelization
ADC
2 channel (I ,Q)
12 bit, 512 MS/s
Delay
500 ns
FIR
4 tap Sinc with
Hamming window
2.5 x bin scale
FFT
512 sample
1 MS/s output
FIR
4 tap Sinc with
Hamming window
2.5 x bin scale
FFT
512 sample
1 MS/s output
256 channel selector
LUT
Read from
DRAM
FIR
20 tap Hamming
LPF, 250 kHz
2
Phase
Conv.
CORDIC
Prog.
FIR
26 tap, 1 MS/s
Pulse
detection

Firmware

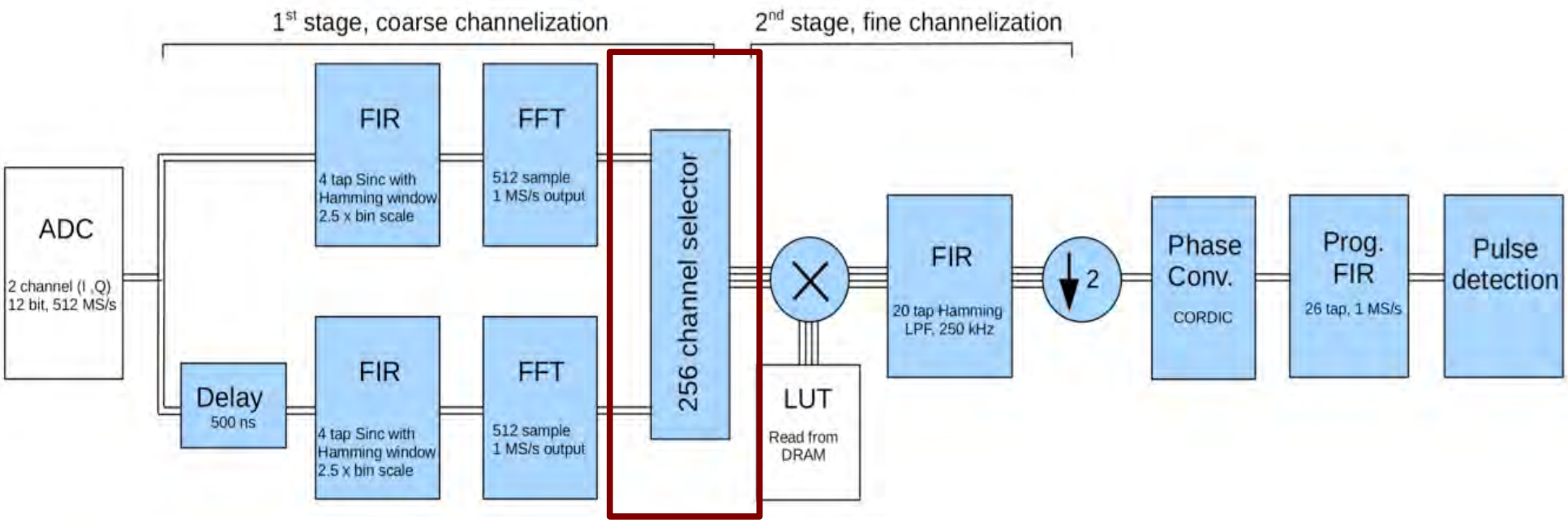
1st stage, coarse channelization
2nd stage, fine channelization
ADC
2 channel (I ,Q)
12 bit, 512 MS/s
Delay
500 ns
FIR
4 tap Sinc with
Hamming window
2.5 x bin scale
FFT
512 sample
1 MS/s output
FIR
4 tap Sinc with
Hamming window
2.5 x bin scale
FFT
512 sample
1 MS/s output
256 channel selector
LUT
Read from
DRAM
FIR
20 tap Hamming
LPF, 250 kHz
2
Phase
Conv.
CORDIC
Prog.
FIR
26 tap, 1 MS/s
Pulse
detection

Firmware

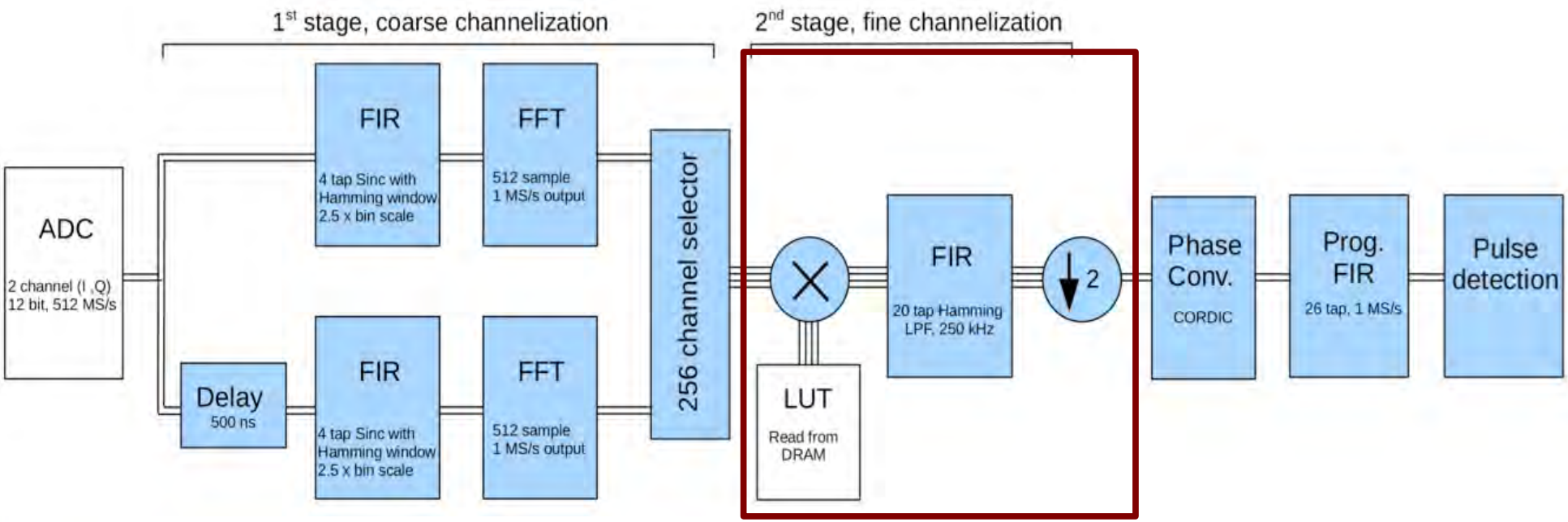
1st stage, coarse channelization
2nd stage, fine channelization
ADC
2 channel (I ,Q)
12 bit, 512 MS/s
Delay
500 ns
FIR
4 tap Sinc with
Hamming window
2.5 x bin scale
FFT
512 sample
1 MS/s output
FIR
4 tap Sinc with
Hamming window
2.5 x bin scale
FFT
512 sample
1 MS/s output
256 channel selector
LUT
Read from
DRAM
FIR
20 tap Hamming
LPF, 250 kHz
2
Phase
Conv.
CORDIC
Prog.
FIR
26 tap, 1 MS/s
Pulse
detection

Channelization

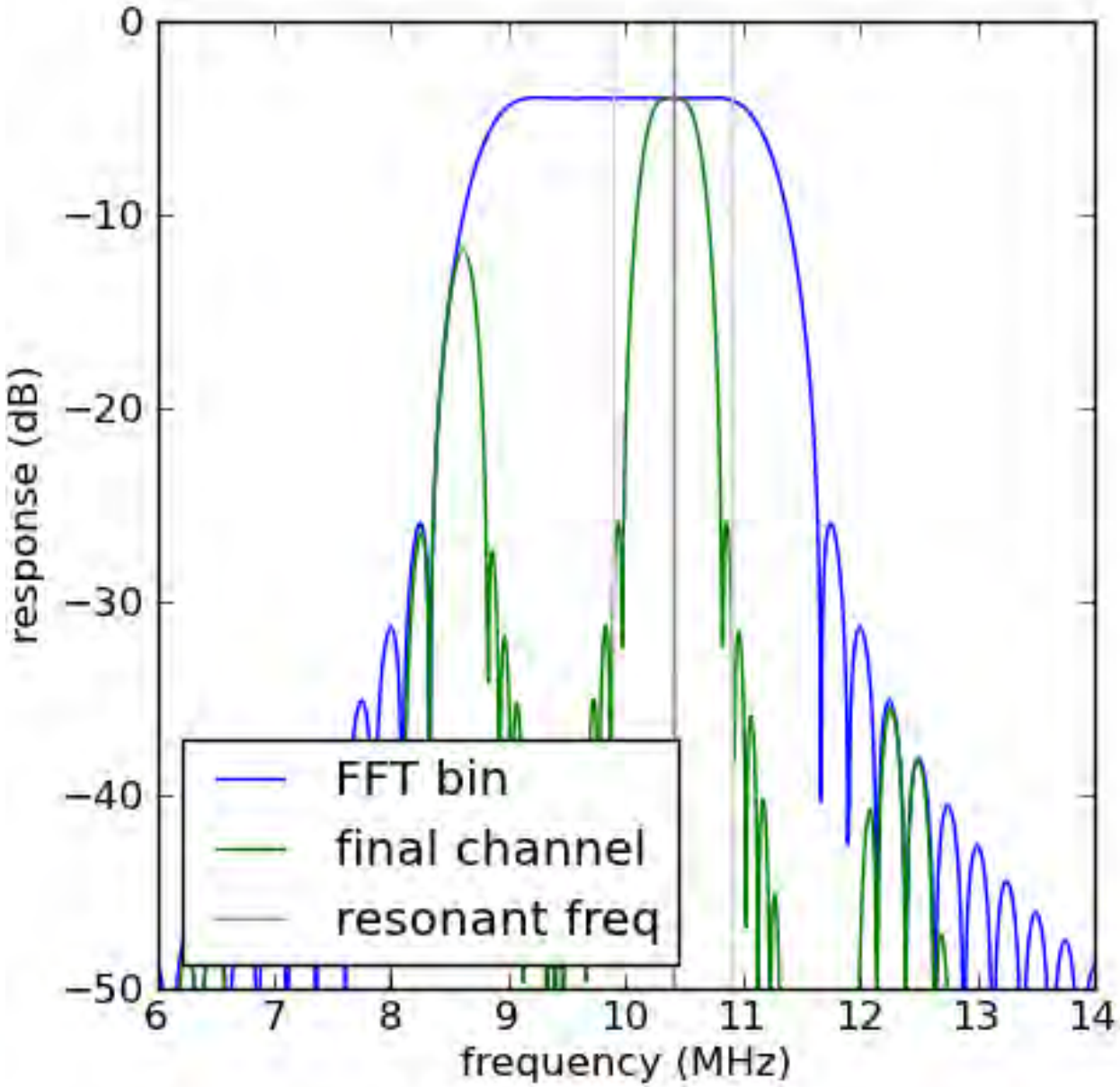

Firmware

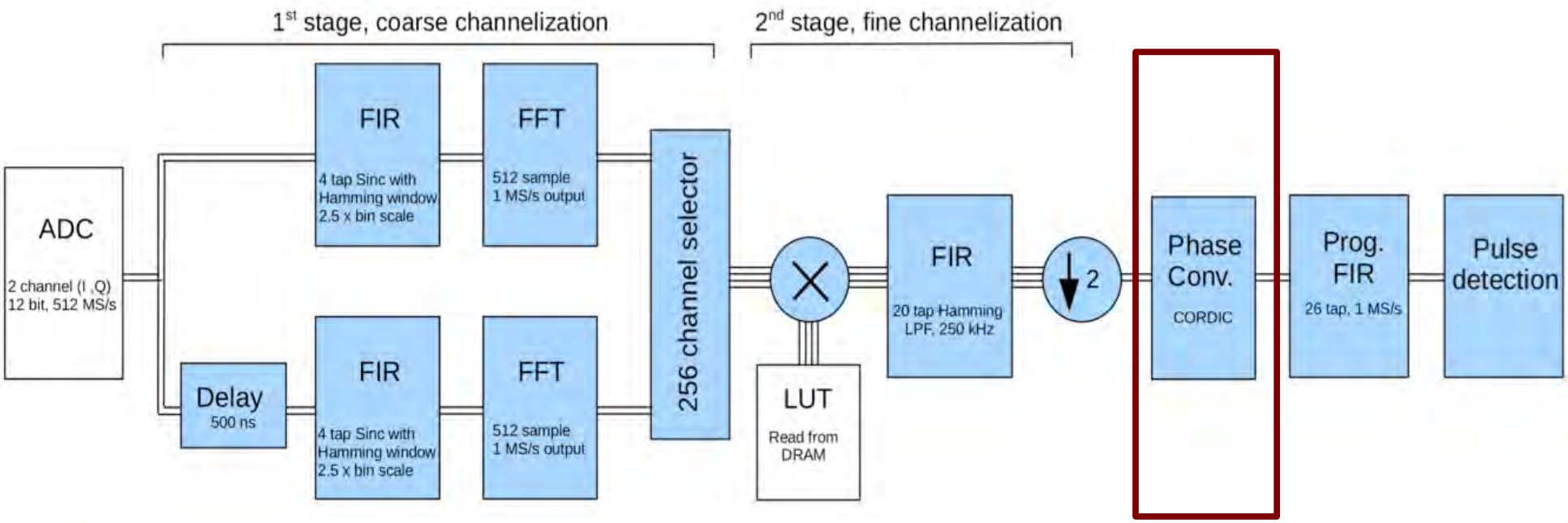
1st stage, coarse channelization
2nd stage, fine channelization
ADC
2 channel (I ,Q)
12 bit, 512 MS/s
Delay
500 ns
FIR
4 tap Sinc with
Hamming window
2.5 x bin scale
FFT
512 sample
1 MS/s output
FIR
4 tap Sinc with
Hamming window
2.5 x bin scale
FFT
512 sample
1 MS/s output
256 channel selector
LUT
Read from
DRAM
FIR
20 tap Hamming
LPF, 250 kHz
2
Phase
Conv.
CORDIC
Prog.
FIR
26 tap, 1 MS/s
Pulse
detection

Firmware

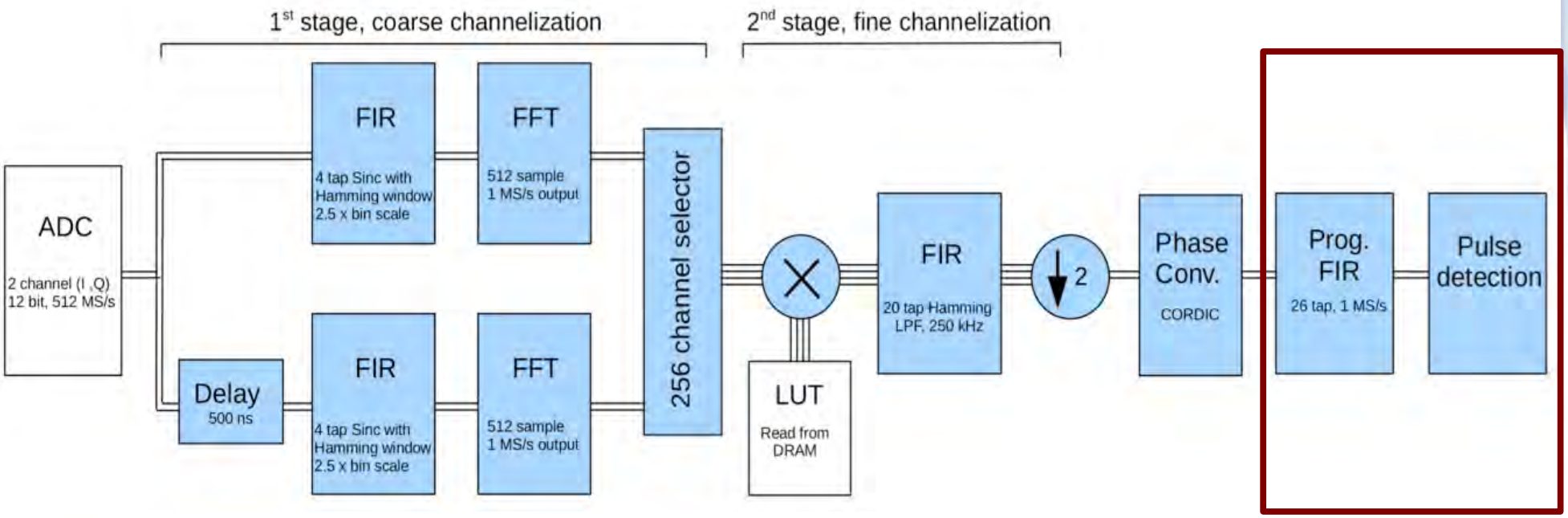
1st stage, coarse channelization
2nd stage, fine channelization
ADC
2 channel (I ,Q)
12 bit, 512 MS/s
Delay
500 ns
FIR
4 tap Sinc with
Hamming window
2.5 x bin scale
FFT
512 sample
1 MS/s output
FIR
4 tap Sinc with
Hamming window
2.5 x bin scale
FFT
512 sample
1 MS/s output
256 channel selector
LUT
Read from
DRAM
FIR
20 tap Hamming
LPF, 250 kHz
2
Phase
Conv.
CORDIC
Prog.
FIR
26 tap, 1 MS/s
Pulse
detection

Pulse Detection

- Baseline tracking/subtraction
- Custom optimal filters (26 taps)

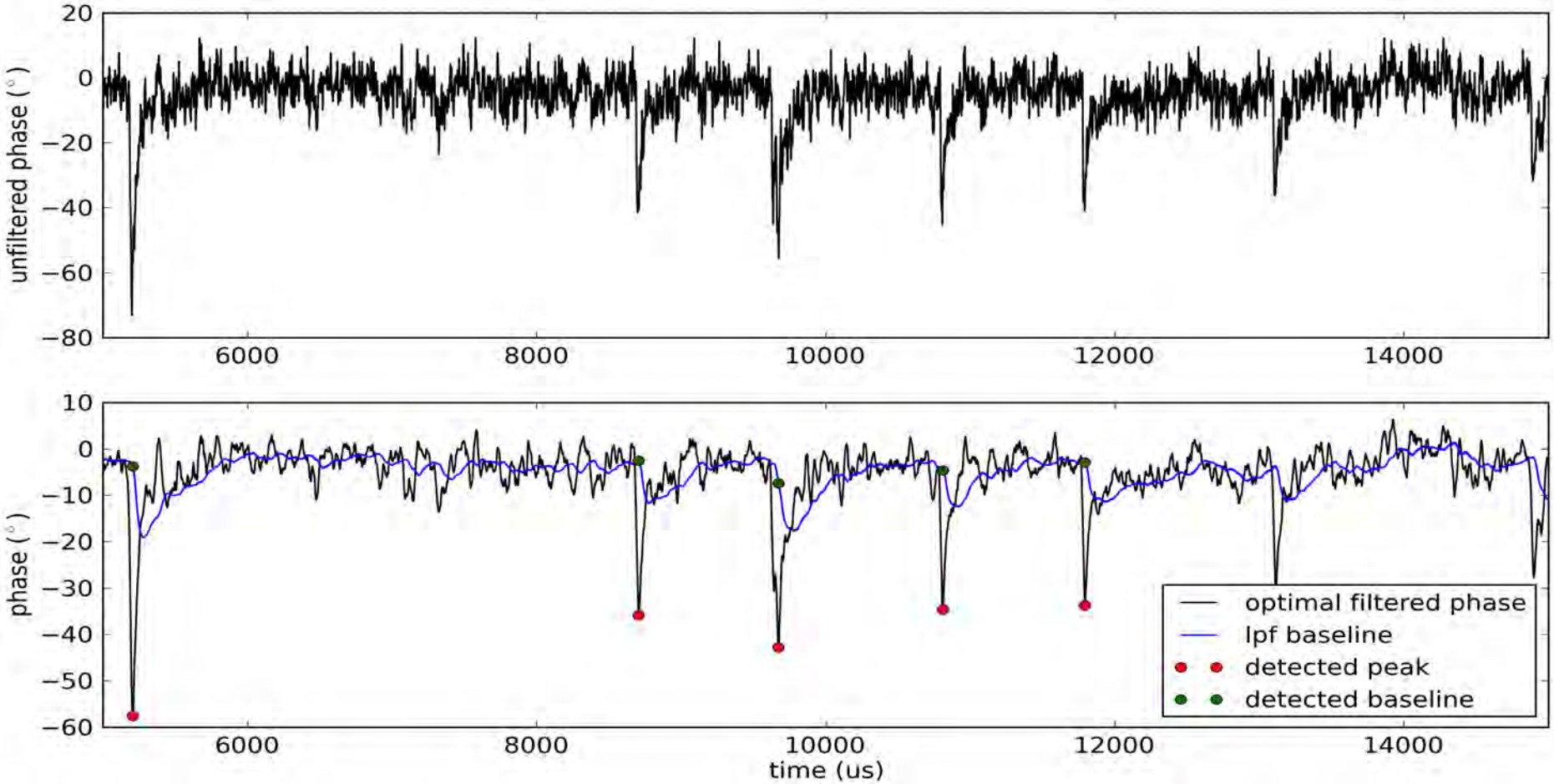

Energy Calibration

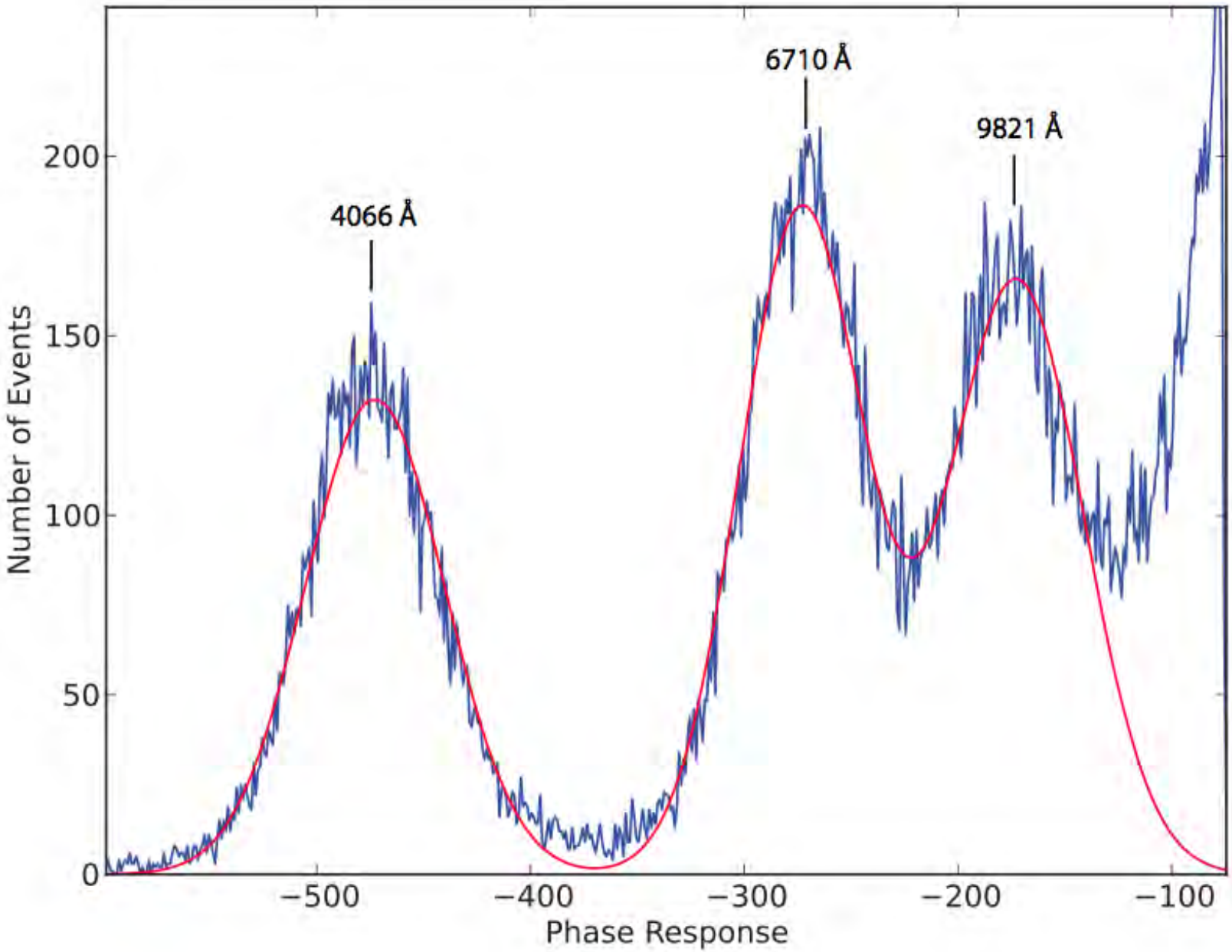

Linearity

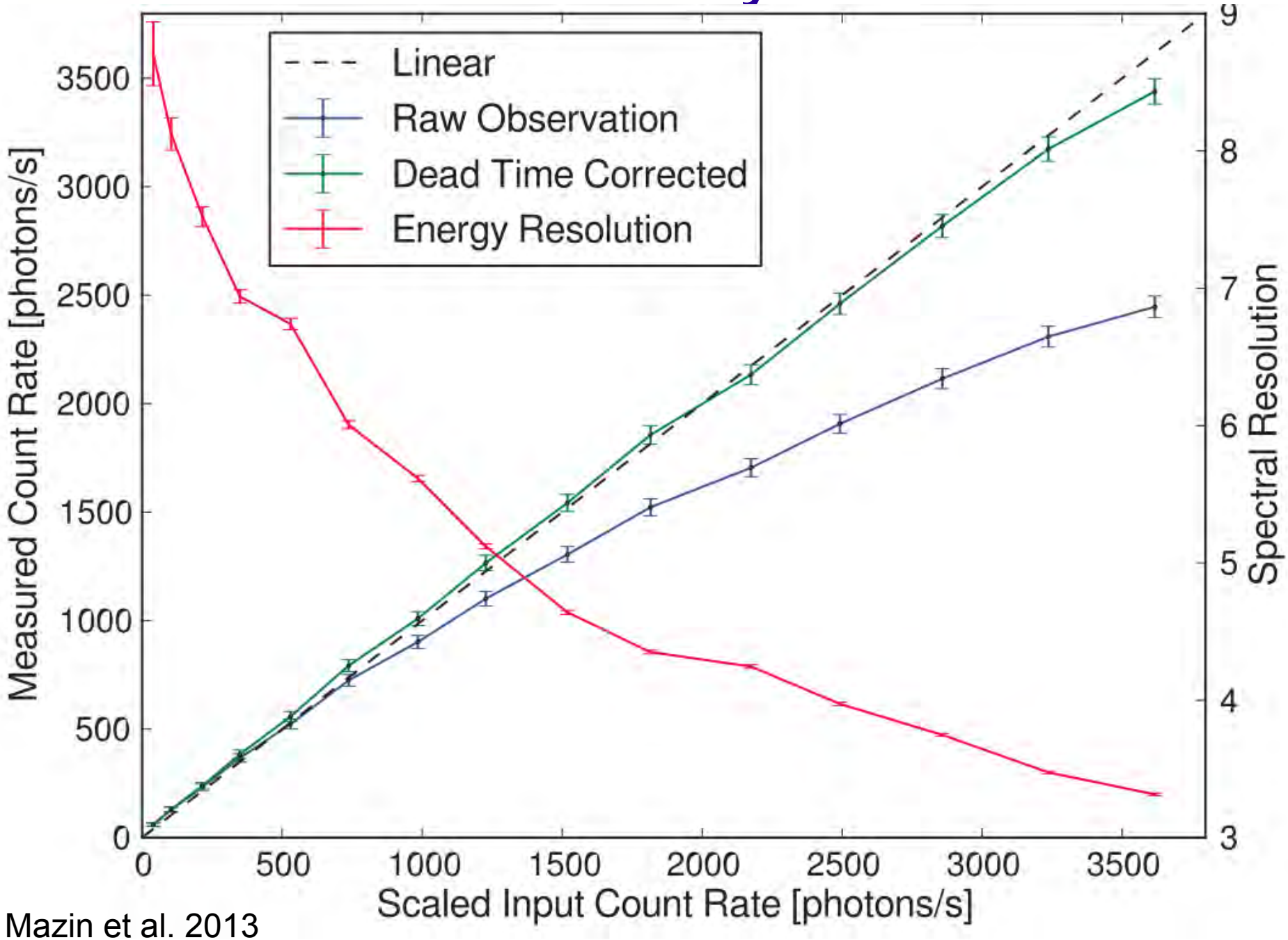

Mazin et al. 2013

Outline

- Detectors and Instrument
- Readout
- **Observations and Results**
- Ongoing and Future Work

Observations

- Deployed at 200” telescope at Palomar Observatory
- Observed a wide variety of objects
    - Optical pulsars
    - Compact binaries
    - Galaxies
    - Stars with planets

Crab Pulsar

Credit:
X-ray: NASA/CXC/SAO/F.Seward;
Optical: NASA/ESA/ASU/J.Hester & A.Loll;
Infrared: NASA/JPL-Caltech/Univ. Minn./R.Gehrz

- Supernova observed in 1054 AD
- Period – 33ms
- Distance ~ 2 kpc
- Giant pulses dominate radio emission

Crab Pulsar

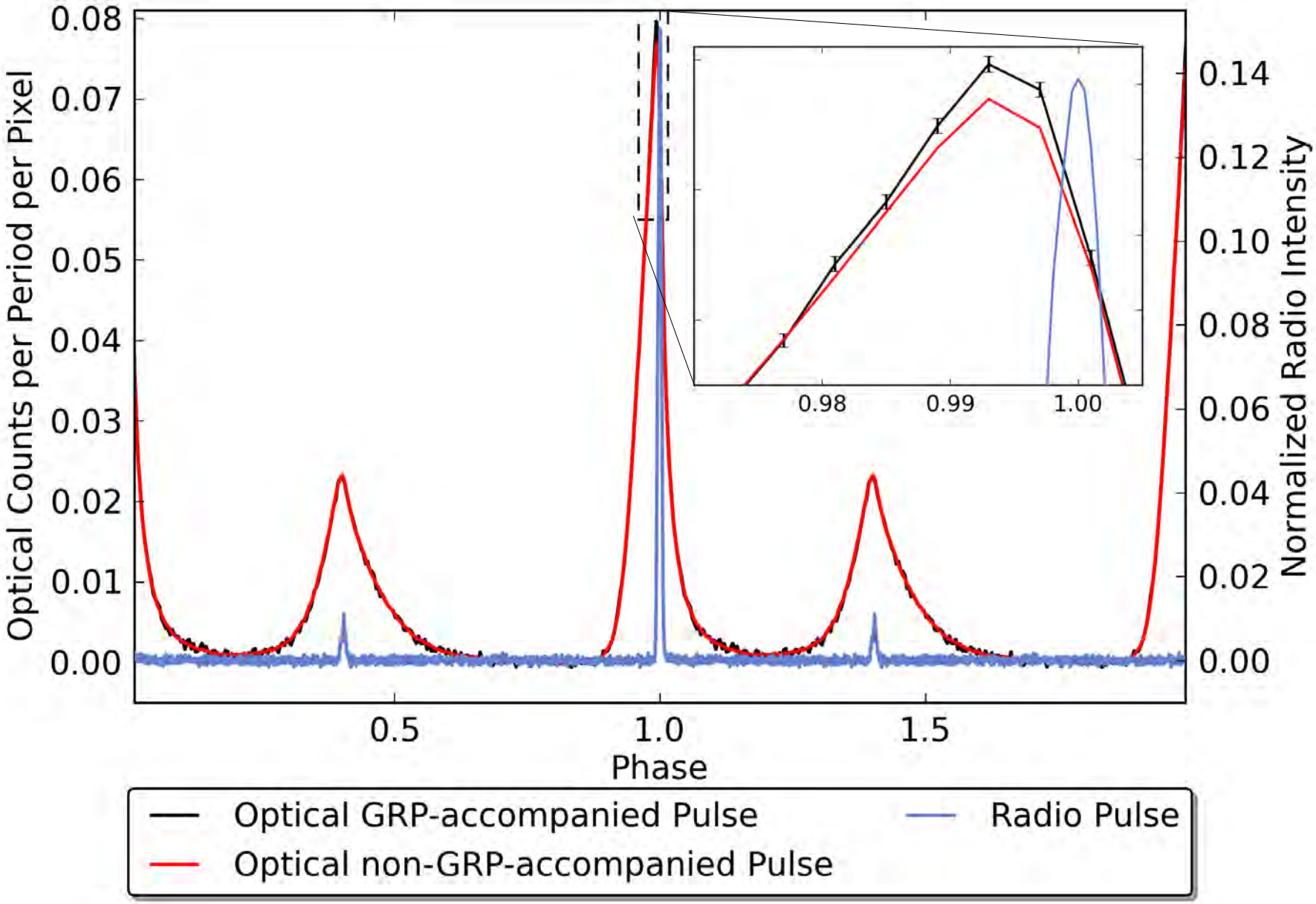
Optical Counts per Period per Pixel
0.08
0.07
0.06
0.05
0.04
0.03
0.02
0.01
0.00
Normalized Radio Intensity
0.14
0.12
0.10
0.08
0.06
0.04
0.02
0.00
0.98
0.99
1.00
0.5
1.0
1.5
Phase
Optical GRP-accompanied Pulse
Optical non-GRP-accompanied Pulse
Radio Pulse

New Temporal Correlation

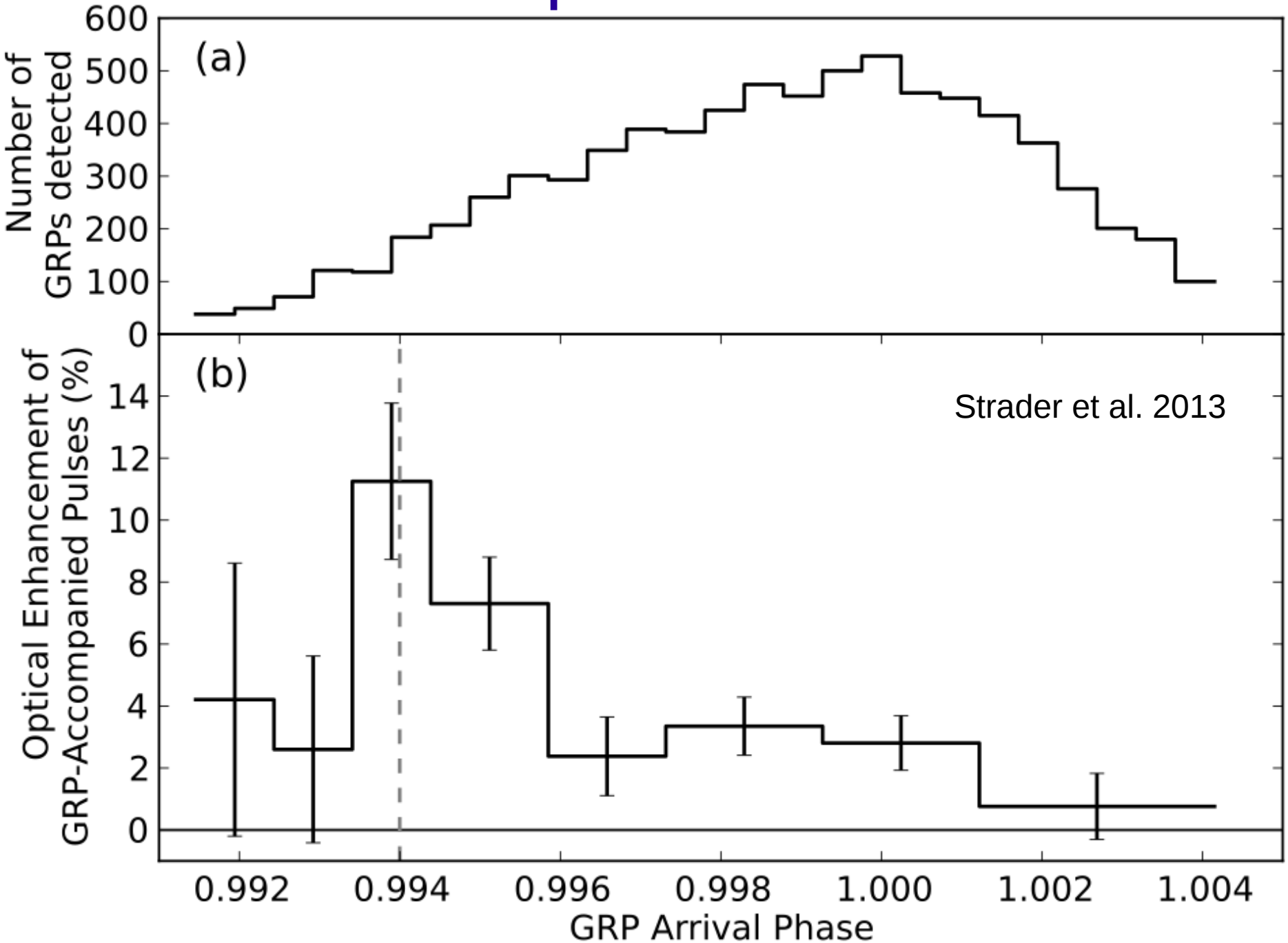

Spectrum of Enhanced Pulses

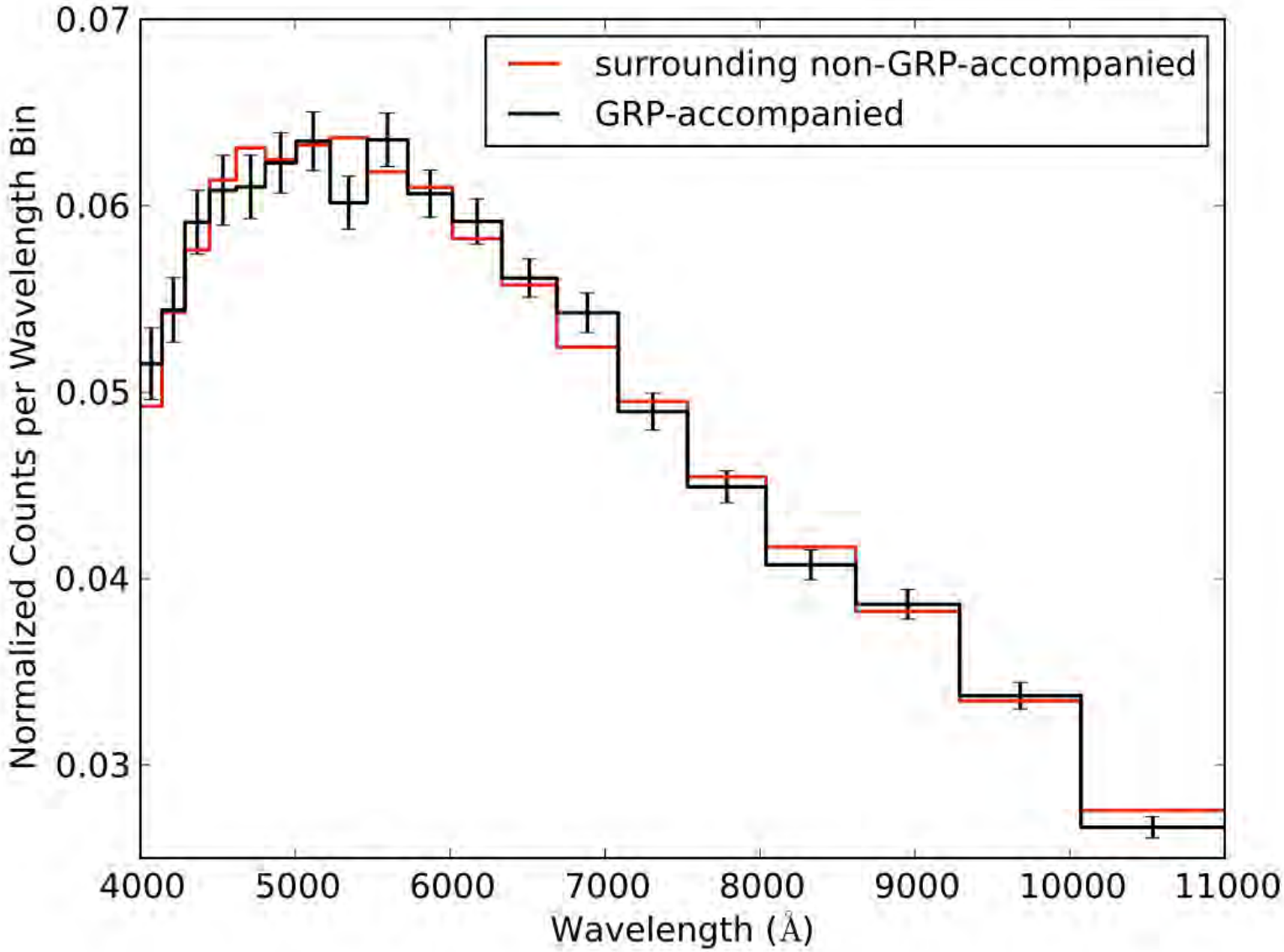

How Big are GRPs?

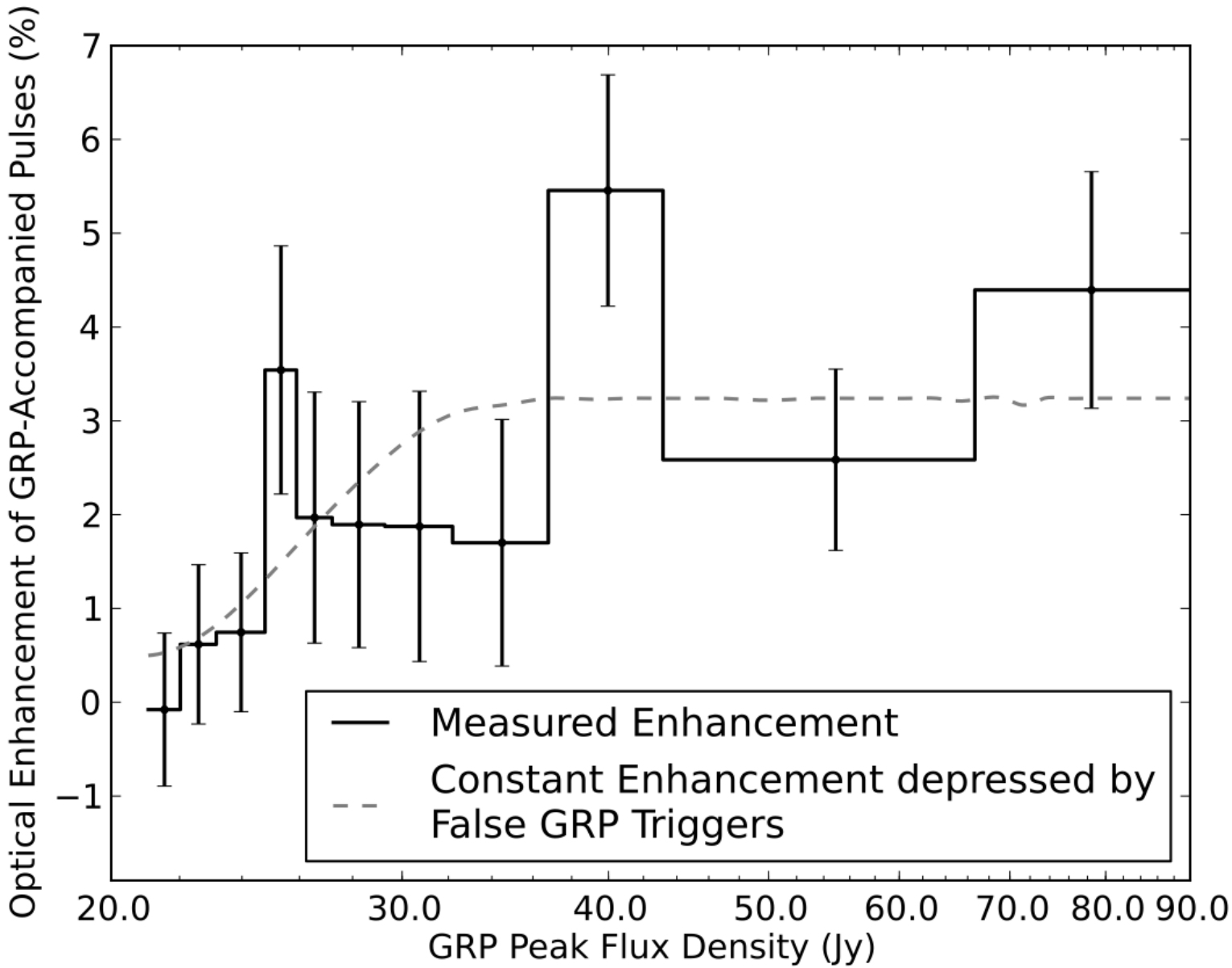

Outline

- Detectors and Instrument
- Readout
- Observations and Results
- **Ongoing and Future Work**

Next Generation Instruments

- Direct imaging of exoplanets
- DARKNESS
  - Will integrate with Project 1640 Coronagraph at Palomar
  - 10,000 pixels
  - 700-1400 nm
- MEC (MKID Exoplanet Camera)
  - Will integrate with SCExAO Coronagraph at Subaru

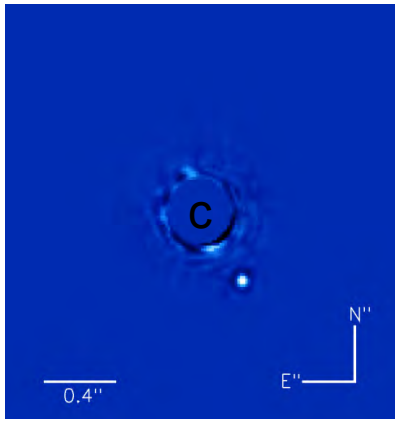

Direct Image of β Pictoris b
Macintosh et al (2014)

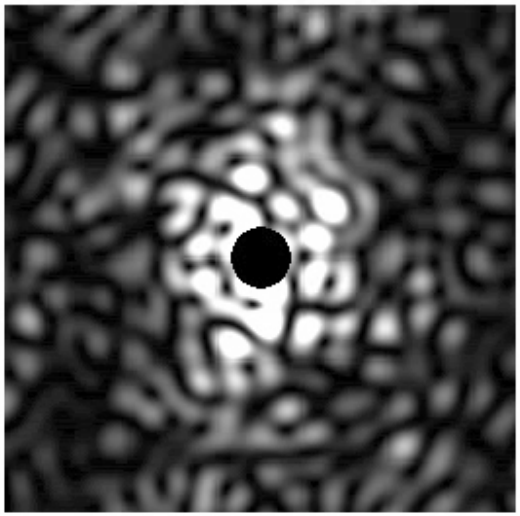

Simulation from S. Remi and B. Oppenheimer at AMNH

Next Generation Readout

- Collaboration with Fermilab
- Five feedlines with ~2000 pixels each
- 10 ROACH2 boards
- 2.0 Gsps ADC
- Each ROACH2 reads out 1024 pixels in 2 GHz of bandwidth
- Real time image cubes

Summary

- MKIDs have energy and time resolution
- Use ROACH to create and process readout tones
- Demonstrated with ARCONS
- Found new timing correlation between optical and radio pulses in Crab pulsar
- Scaling up to 10,000 pixels for next generation

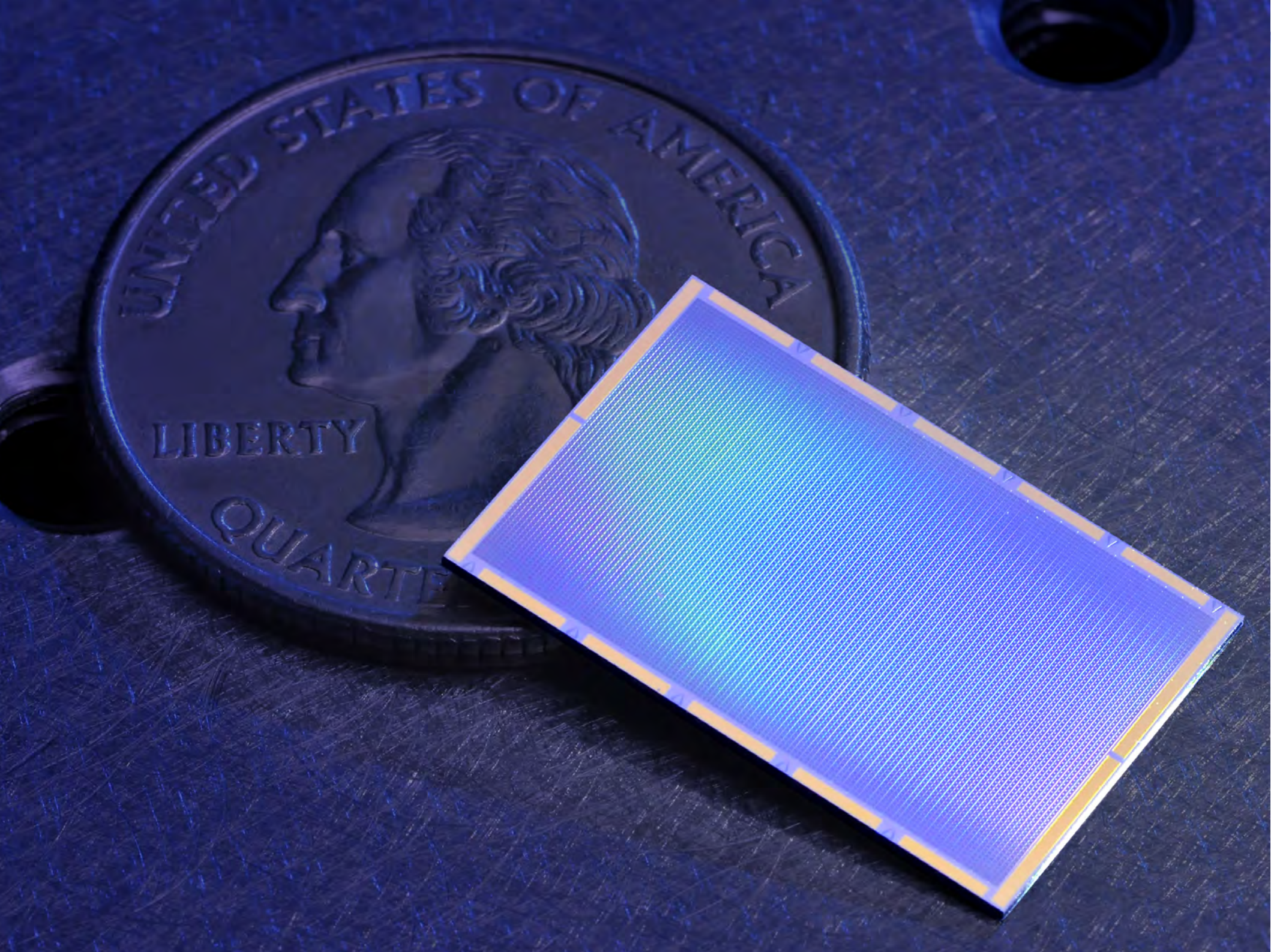
UNITED STATES OF AMERICA
LIBERTY
QUARTE

Supplementary Slides

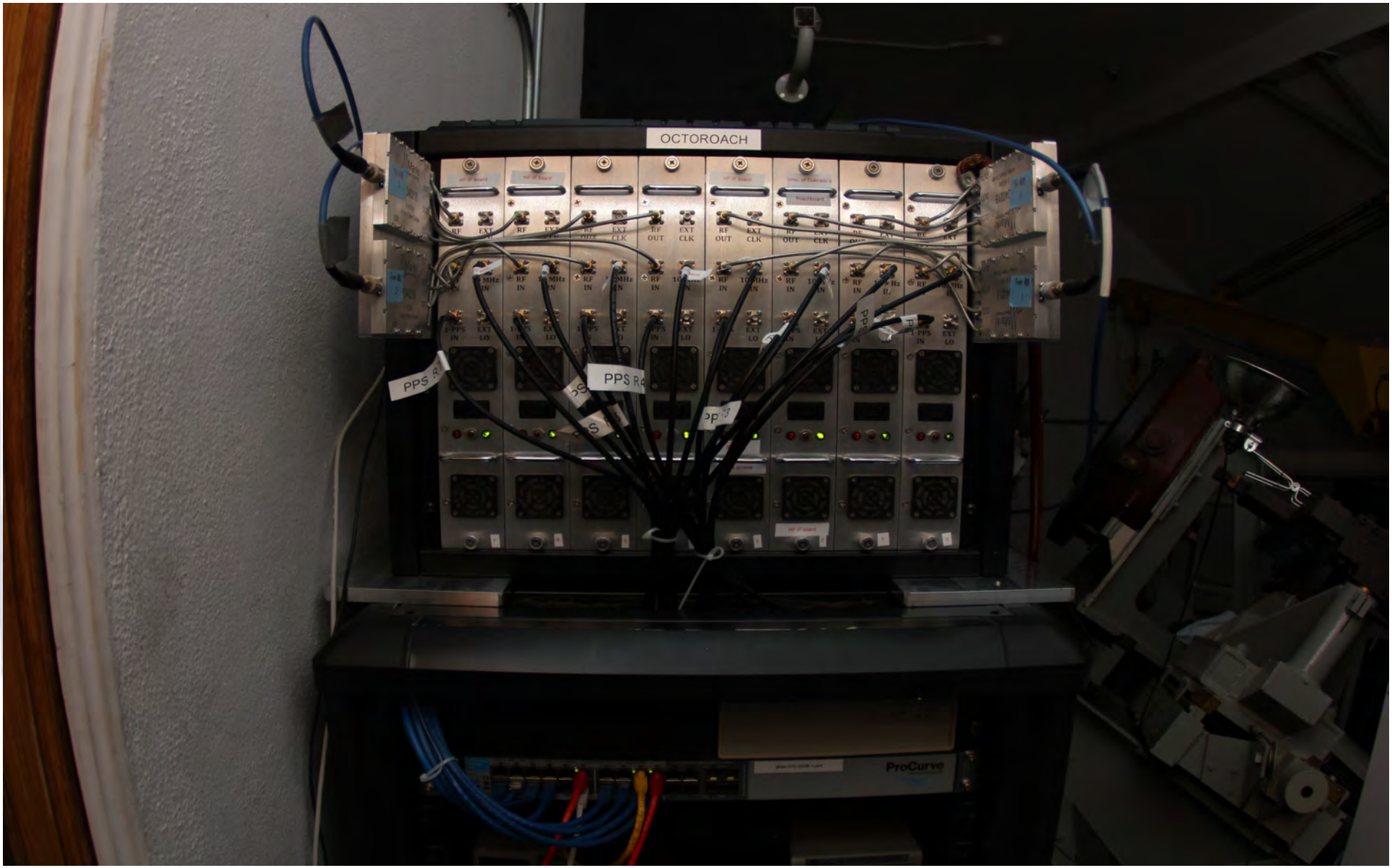
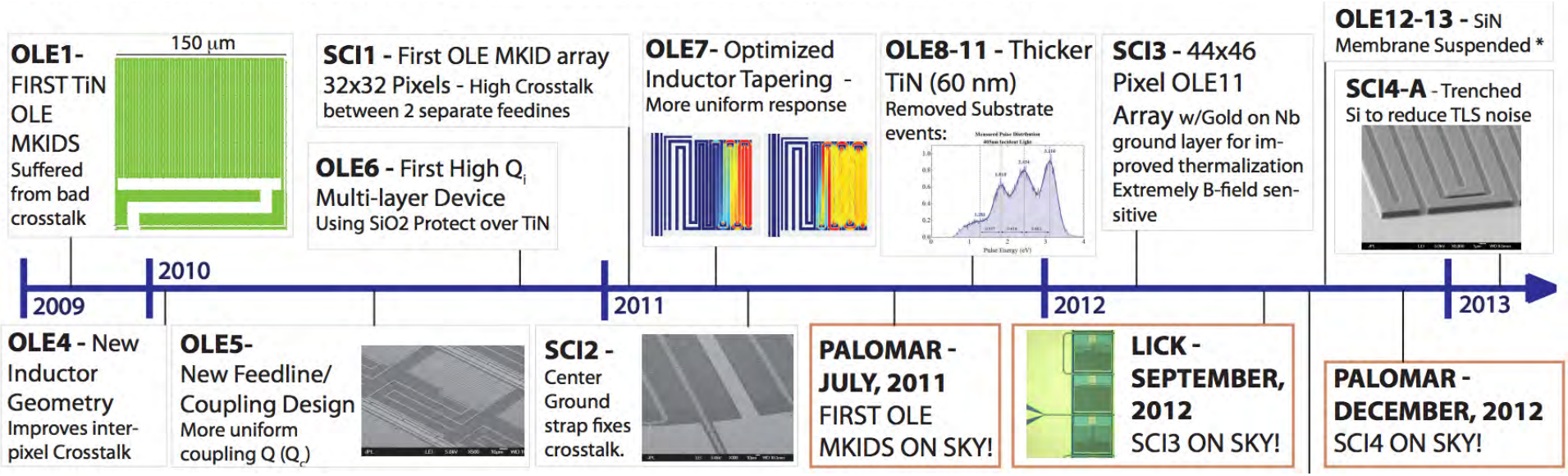
Optical MKID History